PRODUCT SHEET

Description:
Keyboard Slide NJ2060, 308mm, W/4 Angle Brackets, BZP 35mm Profile Height, 30 KG Load Capacity

Item number:
25.23.342-0

Units	Box	Carton	HS Code	Barcode
Pair	1	20	8302420090	5704866092807

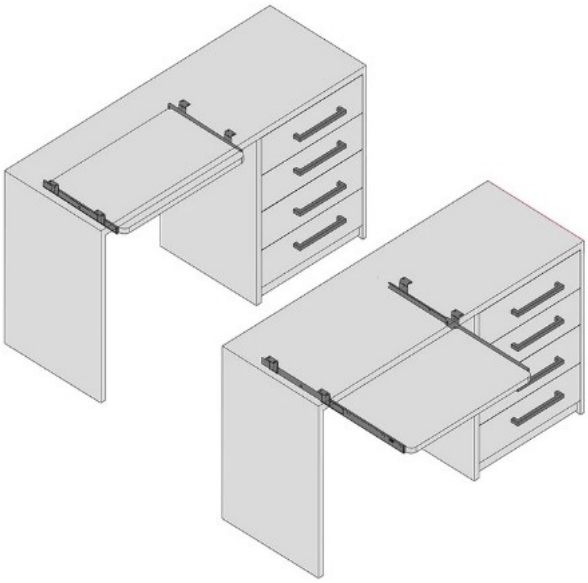

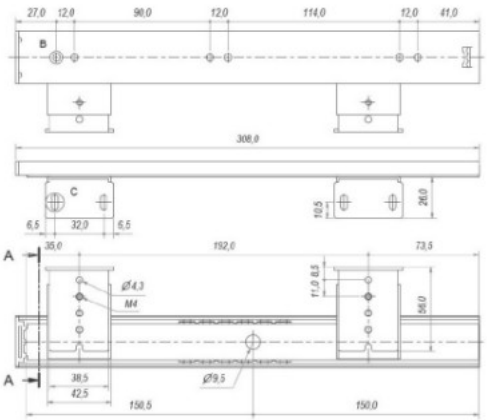

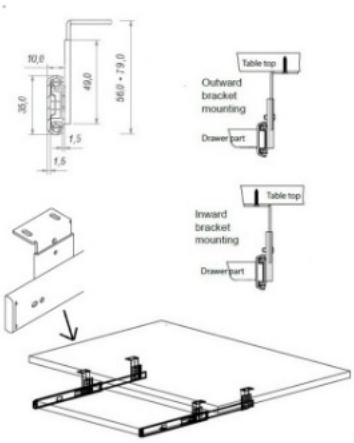

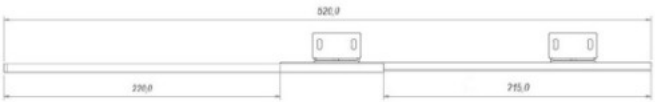

SISO A/S
Mileparken 11
DK-2740 Skovlunde
Denmark
VAT: 24786013

Phone +45 45 830 900

www.siso.dk
siso@siso.dk

Danske Bank
Nytorv Branch
Copenhagen
SWIFT: DABADKKK

Account no.
4180 3112 112936
IBAN Account
DK7230003112112936